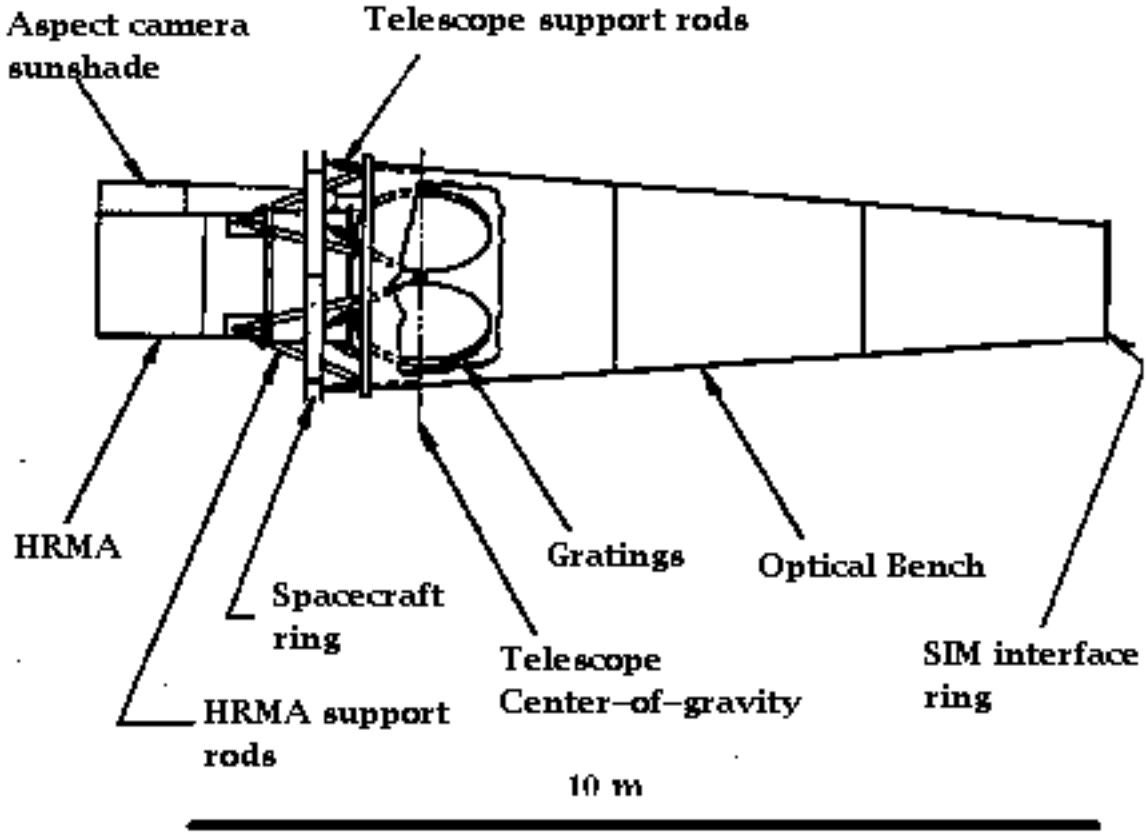
Aspect camera sunshade
Telescope support rods
HRMA
Spacecraft ring
HRMA support rods
Telescope Center–of–gravity
Gratings
Optical Bench
SIM interface ring
10 m